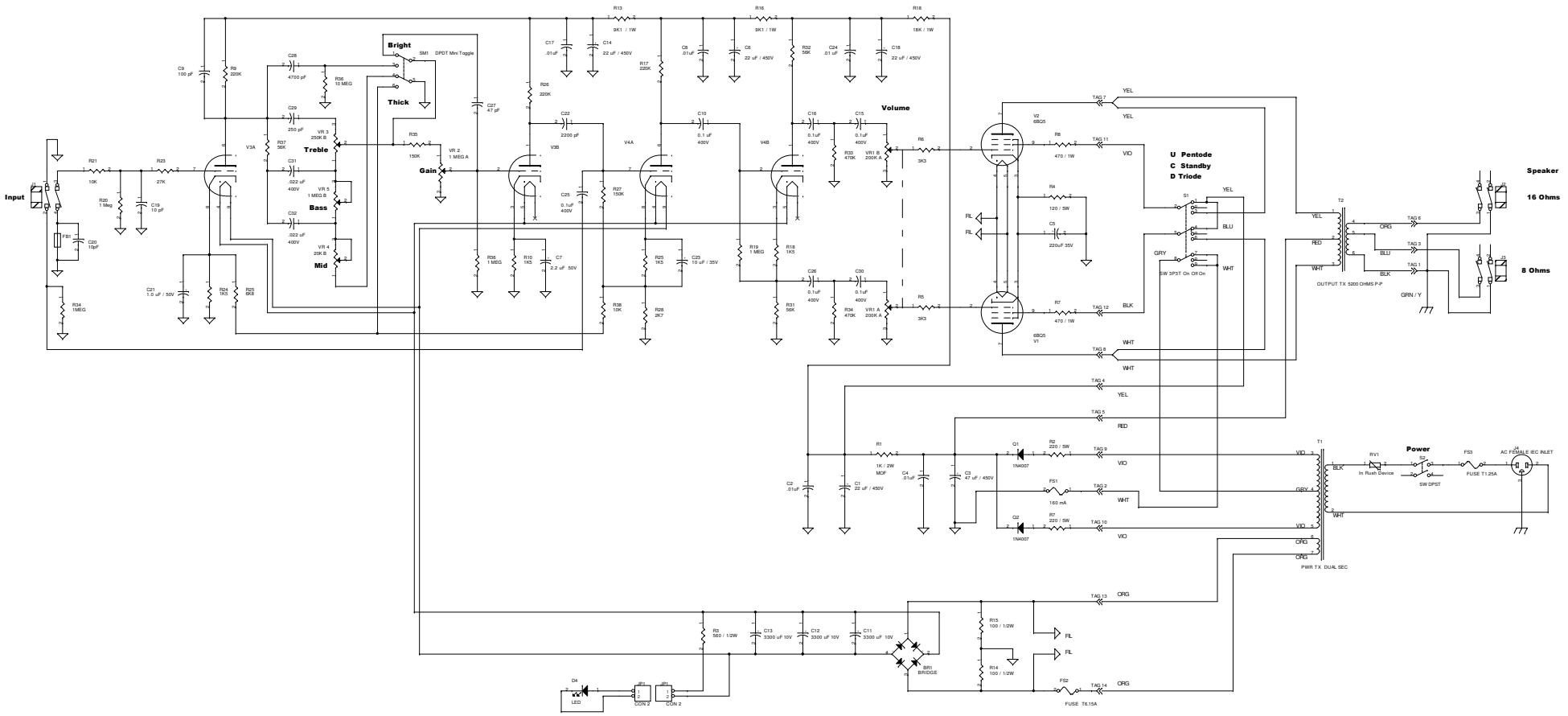

Title	VOX Night Train NT-15
Size D	Document Number PCB_NT15H_1001_RS2
Rev	A
Date: Tuesday, July 21, 2009	Sheet 1 of 1